BATHROOMWARE
FOR REAL KIWIS
Raymor

AVON TAPWARE

The Raymor Avon range is assembled and tested in New Zealand and takes a modern slant on classic design creating a wide appeal for all home decors. It's available in basin, bath, sink and shower tapware. Complemented with its European cartridge, Avon is a perfect match for any renovation.

BASIN MIXER
644893

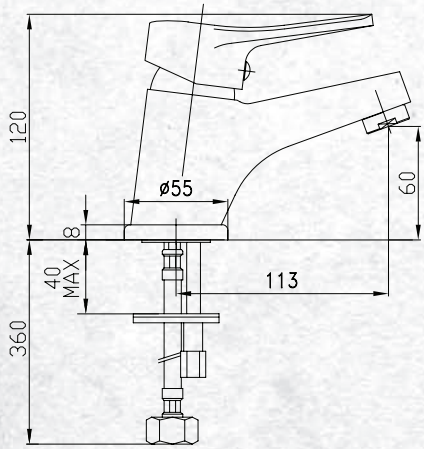

FEATURES

- Solid brass body & handle, wide bore hot hose
- Spout reach 113mm to centre of outlet
- Suitable for all pressures, min 35kPa
- European cartridge
- *WELS 4 ★7.5 lpm (mains)*
- *WELS 3 ★9 lpm (low)*